8" Lavatory faucet

GN08LXX

Specifications

Descriptions

- ½" male inlet NPT
- Ceramic cartridge
- Solid brass
- Automatic drain

Available colors

- C(W) : Chrome / (White)
- PN : Polished nickel (PVD)
- BN(W) : Brushed nickel (PVD) / (White)
- BNC : Brushed nickel (PVD) / Chrome

Flows

- Max. flow 5.7 L/min, 1.5 gpm (US) 60psi

Cartridges

- Hot: #401-079
- Cold: #401-080

Certifications

- ASME A112.18.1
- NSF61
- CSA B125.1

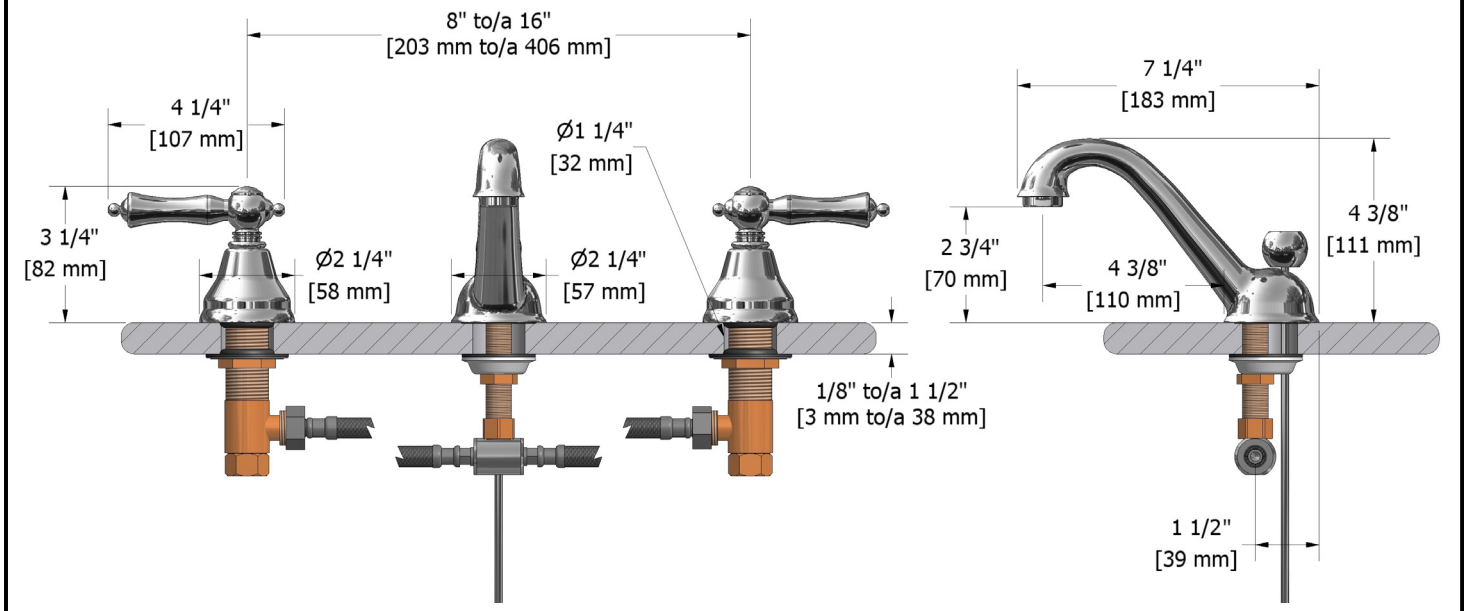

Warranty

The Riobel inc. product carries a limited LIFETIME warranty on the finish Chrome, Gold (PVD), Brushed nickel (PVD), Night brushed (PVD), Polished nickel (PVD) and all working parts and is guaranteed from the initial date of purchase against all manufacturing defects. Other finished 1 year.

Customer service

Ontario, West Canada : 888-287-5354 Quebec, Maritimes, United States : 866-473-8442