8" Wall mount tub faucet

EF05LXX

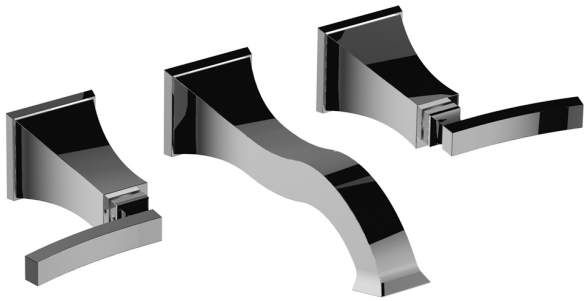

Specifications

Descriptions

- ½" female inlet NPT
- Ceramic cartridge
- Solid brass

Available colors

- C : Chrome
- PN : Polished nickel (PVD)
- BN : Brushed nickel (PVD)

Flows

- Max. flow 40 L/min, 10.5 gpm (US) 60psi

Cartridges

- Hot: #401-451
- Cold: #401-452

Certifications

- CMR248 Approval
- ASME A112.18.1
- CSA B125.1

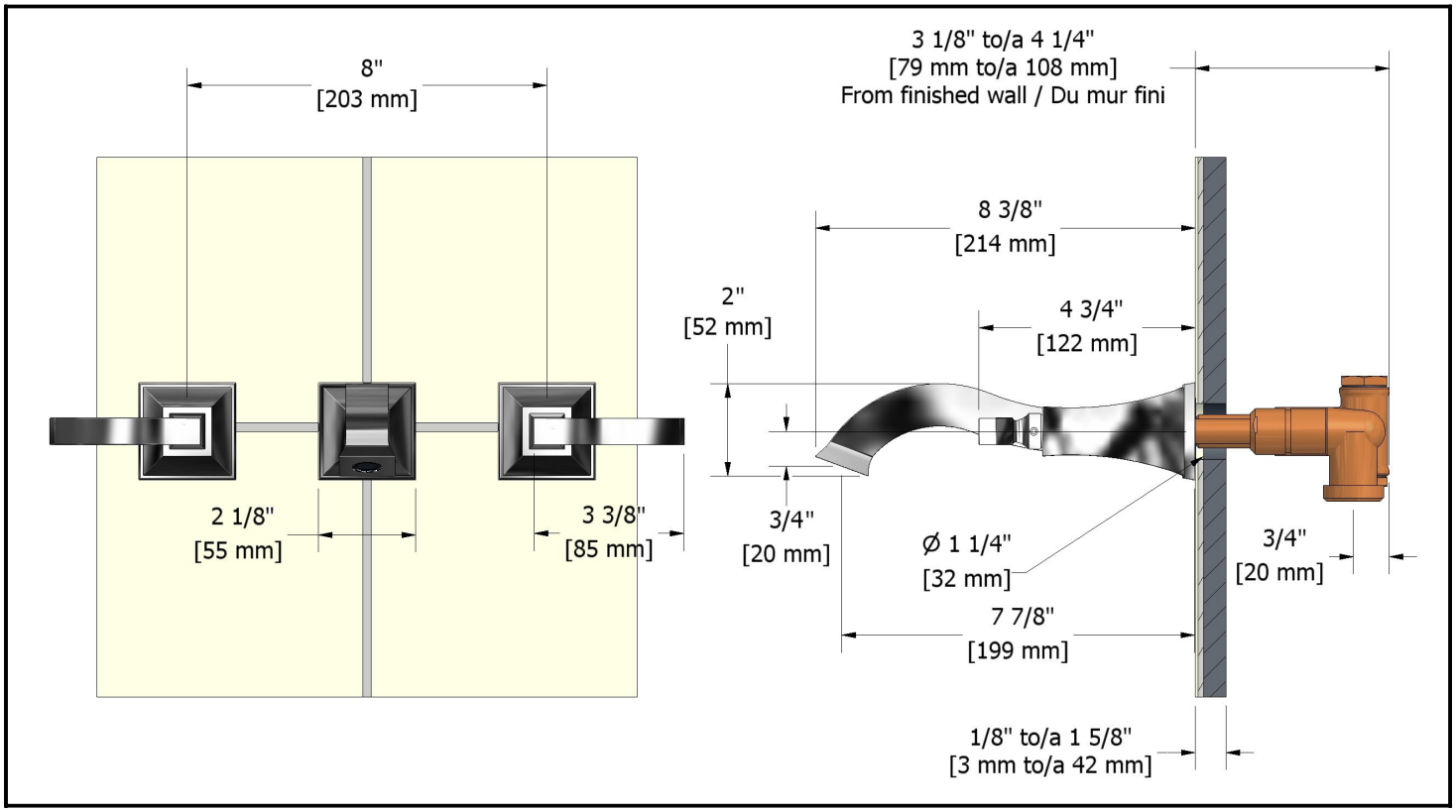

Warranty

The Riobel inc. product carries a limited LIFETIME warranty on the finish Chrome, Gold (PVD), Brushed nickel (PVD), Night brushed (PVD), Polished nickel (PVD) and all working parts and is guaranteed from the initial date of purchase against all manufacturing defects. Other finished 1 year.

Customer service

Ontario, West Canada : 888-287-5354 Quebec, Maritimes, United States : 866-473-8442