California Faucets®

PALOMAR

TRADITIONAL FLOOR MOUNT TUB FILLER

1303-XX
WE-1303-XX

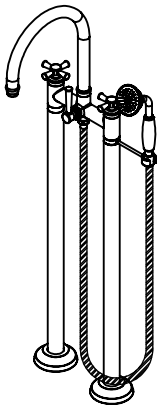

XX = DENOTES HANDLE SERIES

Features

- *No additional wall or trap stabilizer kit required*
- *Tub filler: Maximum flow rate: 15 gpm (60.6 L/min)at 60 psi*
- *Handshower: Maximum flow rate: 2.5 gpm (9.5 L/min) or 2.0 gpm (7.6 L/min) for "WE" (water efficient) model*
- *Rotatable handshower bracket may be placed on COLD or HOT side of body*
- *1/4 turn ceramic disc cartridges*
- *Rough valve sold seprately (9516)*
- *Replace "XX" with desired handle series*
- *Solid brass construction*
- *Over 30 finishes including 14 PVD finishes*

Codes/Standards Applicable

Meets or exceeds the following at date of manufacture:

- *ASME A112.18.1/CSA B125.1*

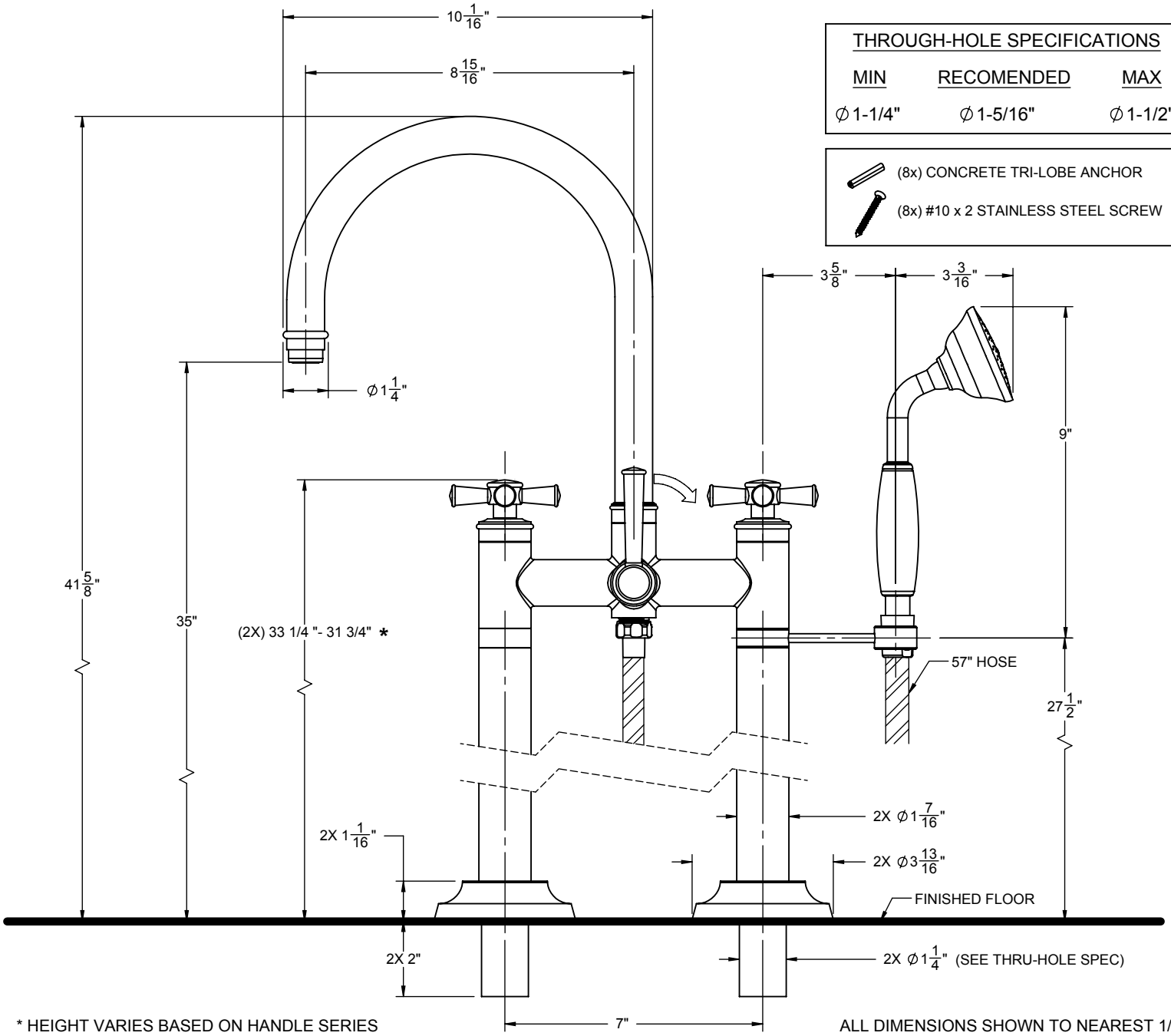

* HEIGHT VARIES BASED ON HANDLE SERIES

ALL DIMENSIONS SHOWN TO NEAREST 1/16"